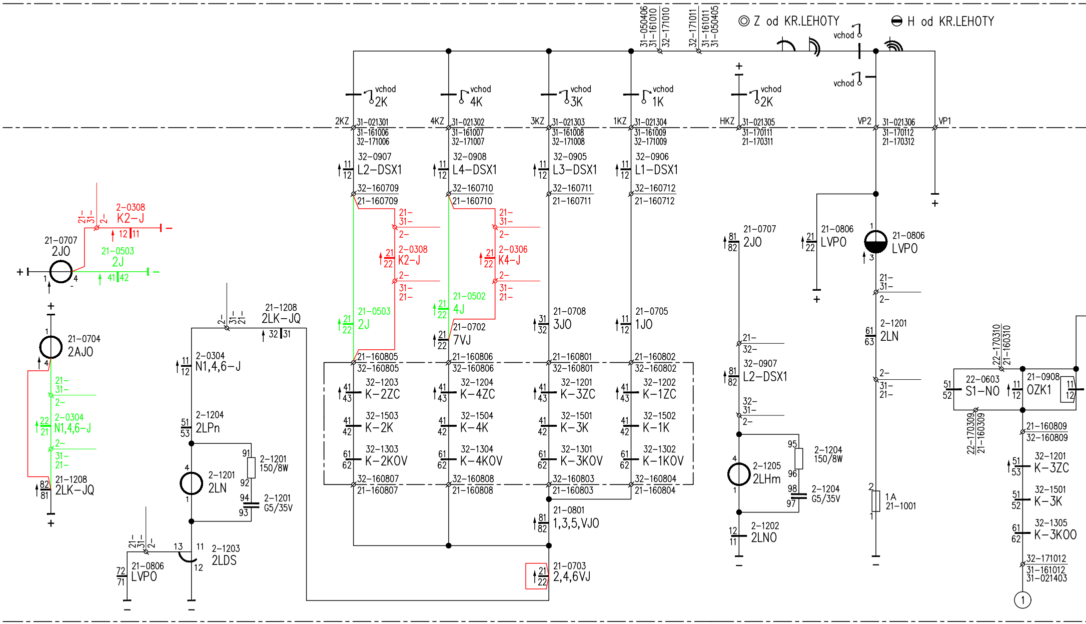
31–050406
31–161010
32–171010
32–171011
31–161011
31–050405
◎ Z od KR.LEHOTY
⊖ H od KR.LEHOTY
vchod
vchod
2K
vchod
4K
vchod
3K
vchod
1K
vchod
2K
+
2KZ
31–021301
31–161006
32–171006
4KZ
31–021302
31–161007
32–171007
3KZ
31–021303
31–161008
32–171008
1KZ
31–021304
31–161009
32–171009
HKZ
31–021305
31–170111
21–170311
VP2
31–021306
31–170112
21–170312
VP1
32–0907
L2–DSX1
11
12
32–0908
L4–DSX1
32–0905
L3–DSX1
32–0906
L1–DSX1
32–160709
21–160709
32–160710
21–160710
32–160711
21–160711
32–160712
21–160712
21–
31–
2–
2–0308
K2–J
21
22
2–
31–
21–
21–
31–
2–
2–0306
K4–J
21
22
2–
31–
21–
21–0503
2J
21
22
21–0502
4J
21
22
21–0702
7VJ
21
22
21–0708
3JO
31
32
21–0705
1JO
11
12
21–0707
2JO
81
82
21–0806
LVPO
21
22
+
21–0806
LVPO
1
3
+
21–
31–
2–
2–1201
2LN
61
63
2–
31–
21–
2
1A
21–1001
1
−
21–
32–
32–0907
L2–DSX1
81
82
32–
31–
2–
4
2–1205
2LHm
1
95
2–1204
150/8W
96
98
2–1204
G5/35V
97
12
2–1202
2LNO
11
−
21–160805
32–160805
21–160806
32–160806
21–160801
32–160801
21–160802
32–160802
32–1203
K–2ZC
41
43
32–1204
K–4ZC
32–1201
K–3ZC
32–1202
K–1ZC
32–1503
K–2K
41
42
32–1504
K–4K
32–1501
K–3K
32–1502
K–1K
32–1303
K–2KOV
61
62
32–1304
K–4KOV
32–1301
K–3KOV
32–1302
K–1KOV
32–160807
21–160807
32–160808
21–160808
32–160803
21–160803
32–160804
21–160804
21–0801
1,3,5,VJO
81
82
21–0703
2,4,6VJ
21
22
21–
31–
2–
2–0308
K2–J
12
11
21–0707
2JO
21–0503
2J
41
42
+
1
4
-
+
1
21–0704
2AJO
4
21–
31–
2–
2–0304
N1,4,6–J
22
21
2–
31–
21–
21–1208
2LK–JQ
82
81
+
2–
31–
21–
21–1208
2LK–JQ
32
31
2–0304
N1,4,6–J
11
12
2–1204
2LPn
51
53
4
2–1201
2LN
1
91
2–1201
150/8W
92
94
2–1201
G5/35V
93
21–
31–
2–
13
11
2–1203
2LDS
12
21–0806
LVPO
72
71
−
−
22–170310
21–160310
22–0603
S1–NO
51
52
21–0908
OZK1
11
12
11
12
22–170309
21–160309
21–160809
32–160809
32–1201
K–3ZC
51
53
32–1501
K–3K
51
52
32–1305
K–3KOO
61
62
32–171012
31–161012
31–021403
①

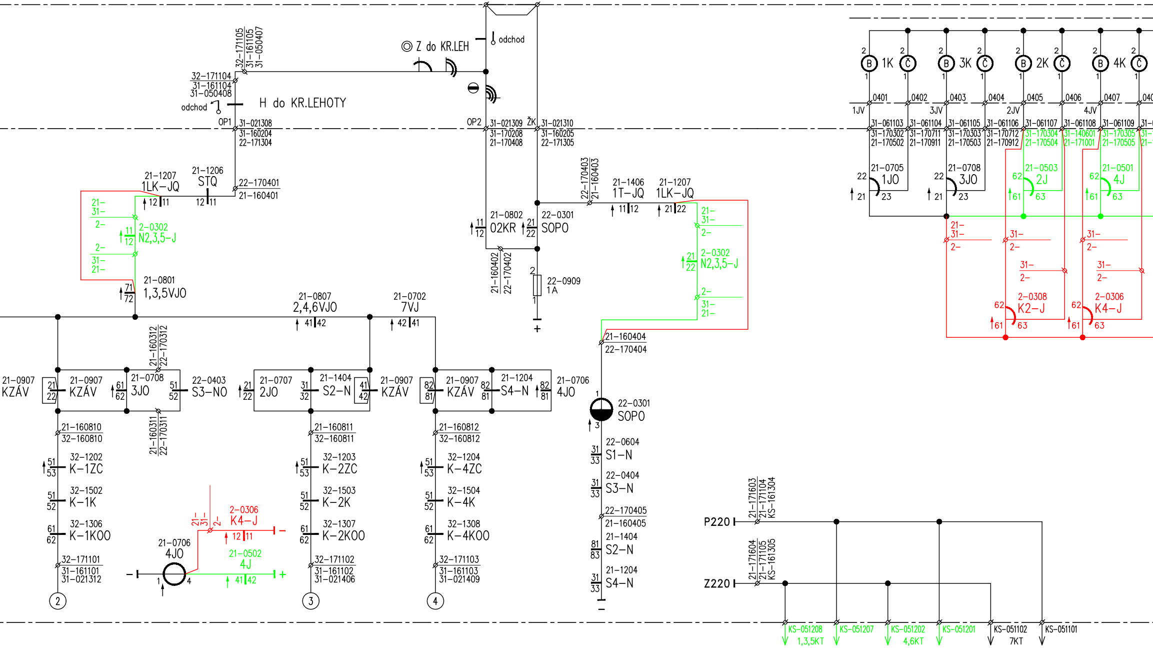
32–171105
31–161105
31–050407
32–171104
31–161104
31–050408
odchod
H do KR.LEHOTY
OP1
31–021308
31–160204
22–171304
Z do KR.LEH
odchod
OP2
31–021309
31–170208
21–170408
ŽK
31–021310
31–160205
22–171305
21–1207
1LK–JQ
21–1206
STQ
22–170401
21–160401
12 11
12 11
21–
31–
2–
2–0302
N2,3,5–J
11
12
2–
31–
21–
21–0801
1,3,5VJO
71
72
21–0802
02KR
11
12
22–0301
SOPO
21
22
21–160402
22–170402
22–0909
1A
2
1
+
22–170403
21–160403
21–1406
1T–JQ
11 12
21–1207
1LK–JQ
21 22
21–
31–
2–
2–0302
N2,3,5–J
21
22
2–
31–
21–
21–160404
22–170404
21–0807
2,4,6VJO
41 42
21–0702
7VJ
42 41
21–160312
22–170312
21–0907
KZÁV
21
22
21–0907
KZÁV
21–0708
3JO
61
62
22–0403
S3–NO
51
52
21–160311
22–170311
21–0707
2JO
21
22
21–1404
S2–N
31
32
21–0907
KZÁV
41
42
21–0907
KZÁV
82
81
21–1204
S4–N
82
81
21–0706
4JO
82
81
22–0301
SOPO
1
3
22–0604
S1–N
31
33
22–0404
S3–N
31
33
22–170405
21–160405
21–1404
S2–N
81
83
21–1204
S4–N
31
33
−
21–160810
32–160810
32–1202
K–1ZC
51
53
32–1502
K–1K
51
52
32–1306
K–1KOO
61
62
32–171101
31–161101
31–021312
②
21–160811
32–160811
32–1203
K–2ZC
51
53
32–1503
K–2K
51
52
32–1307
K–2KOO
61
62
32–171102
31–161102
31–021406
③
21–160812
32–160812
32–1204
K–4ZC
51
53
32–1504
K–4K
51
52
32–1308
K–4KOO
61
62
32–171103
31–161103
31–021409
④
21–0706
4JO
− 1 4
21–
31–
2–
2–0306
K4–J
12 11
−
21–0502
4J
41 42
+
2 B 1K Č 2
2 B 3K Č 2
2 B 2K Č 2
2 B 4K Č 2
0401 0402 0403 0404 0405 0406 0407 040
1JV 3JV 2JV 4JV
31–061103 31–061104 31–061105 31–061106 31–061107 31–061108 31–061109
31–170302 31–170711 31–170303 31–170712 31–170304 31–140601 31–170305
21–170502 21–170911 21–170503 21–170912 21–170504 21–171001 21–170505
21–0705
1JO
22 21 23
21–0708
3JO
22 21 23
21–0503
2J
62 61 63
21–0501
4J
62 61 63
21–
31–
2–
31–
2–
31–
2–
31–
2–
31–
2–
2–0308
K2–J
62 61 63
2–0306
K4–J
62 61 63
P220
Z220
21–171603
21–171104
KS–161304
21–171604
21–171105
KS–161305
KS–051208
1,3,5KT
KS–051207
KS–051202
4,6KT
KS–051201
KS–051102
7KT
KS–051101

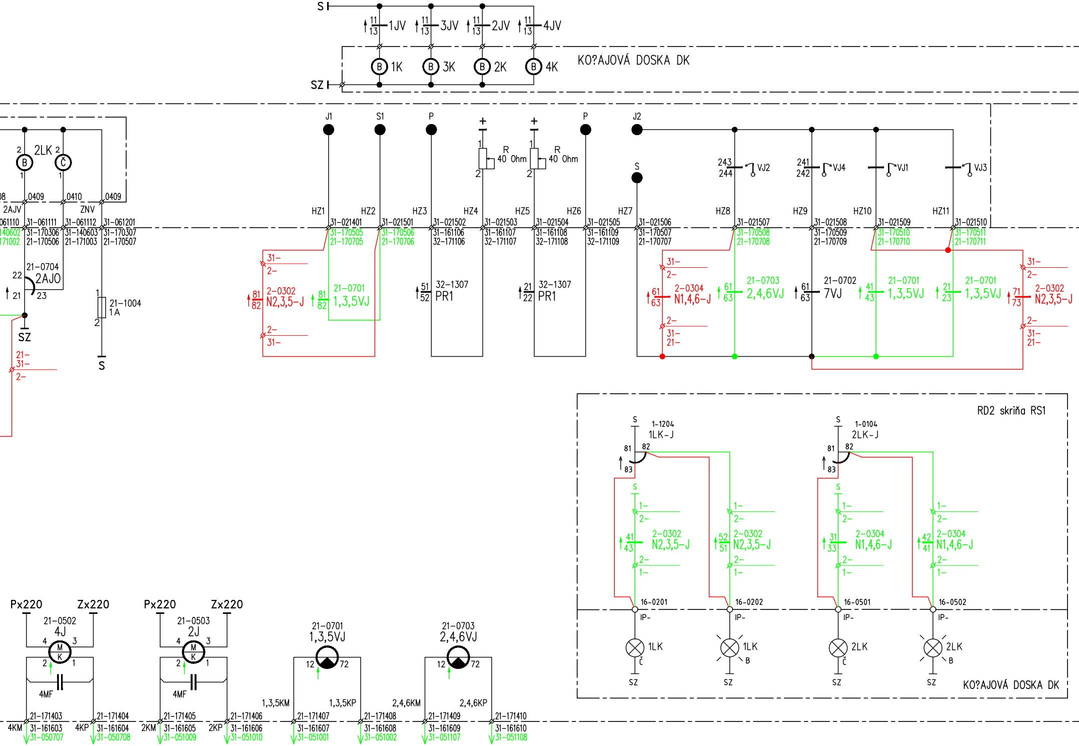
S
SZ
1JV
3JV
2JV
4JV
11
13
1K
3K
2K
4K
KO?AJOVÁ DOSKA DK
2LK
B
Č
2AJV
ZNV
0409
0410
31-061110
31-061111
31-061112
31-061201
31-170306
31-140603
31-170307
21-170506
21-171003
21-170507
21-0704
2AJO
22
21
23
21-1004
1A
J1
S1
P
+
R
40 Ohm
J2
VJ2
VJ4
VJ1
VJ3
243
244
241
242
HZ1
HZ2
HZ3
HZ4
HZ5
HZ6
HZ7
HZ8
HZ9
HZ10
HZ11
31-021401
31-021501
31-021502
31-021503
31-021504
31-021505
31-021506
31-021507
31-021508
31-021509
31-021510
31-170505
31-170506
31-161106
31-161107
31-161108
31-161109
31-170507
31-170508
31-170509
31-170510
31-170511
21-170705
21-170706
32-171106
32-171107
32-171108
32-171109
21-170707
21-170708
21-170709
21-170710
21-170711
31-
2-
2-0302
N2,3,5-J
81
82
21-0701
1,3,5VJ
51
52
32-1307
PR1
21
22
2-0304
N1,4,6-J
61
63
21-0703
2,4,6VJ
21-0702
7VJ
41
43
23
71
73
21-
RD2 skriňa RS1
1-1204
1LK-J
1-0104
2LK-J
83
1-
2-0302
N2,3,5-J
2-0304
N1,4,6-J
31
33
42
16-0201
16-0202
16-0501
16-0502
IP-
1LK
2LK
Č
B
SZ
KO?AJOVÁ DOSKA DK
Px220
Zx220
21-0502
4J
21-0503
2J
M
K
4MF
4KM
4KP
2KM
2KP
21-171403
21-171404
21-171405
21-171406
31-161603
31-161604
31-161605
31-161606
31-050707
31-050708
31-051009
31-051010
21-0701
1,3,5VJ
12
72
1,3,5KM
1,3,5KP
21-171407
21-171408
31-161607
31-161608
31-051001
31-051002
21-0703
2,4,6VJ
2,4,6KM
2,4,6KP
21-171409
21-171410
31-161609
31-161610
31-051107
31-051108

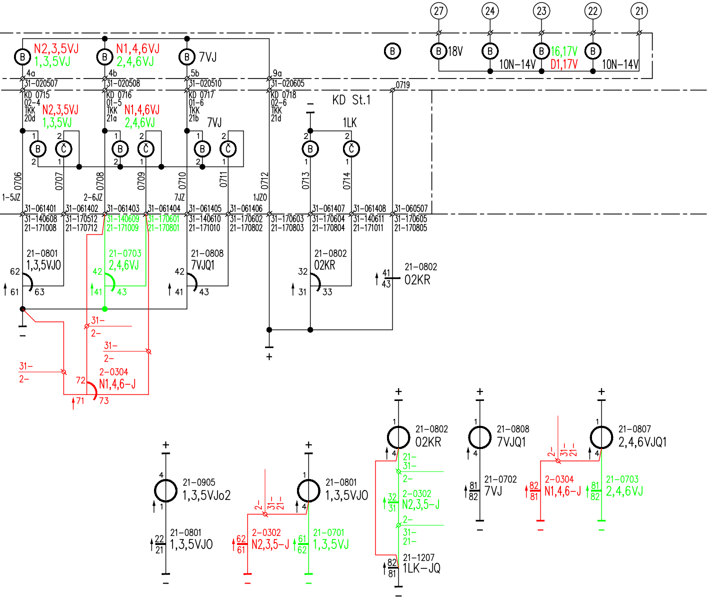
27
24
23
22
21
B
N2,3,5VJ
1,3,5VJ
N1,4,6VJ
2,4,6VJ
7VJ
18V
10N–14V
16,17V
D1,17V
10N–14V
4a
4b
5b
9a
31–020507
31–020508
31–020510
31–020605
0719
KD 0715
02–4
TKK
20d
KD 0716
01–5
TKK
21a
KD 0717
01–6
TKK
21b
KD 0718
02–6
TKK
21d
KD St.1
1LK
Č
0706
0707
0708
0709
0710
0711
0712
0713
0714
1–5JZ
2–6JZ
7JZ
1JZO
31–061401
31–061402
31–061403
31–061404
31–061405
31–061406
31–061407
31–061408
31–060507
31–140608
31–170512
31–140609
31–170601
31–140610
31–170602
31–170603
31–170604
31–140611
31–170605
21–171008
21–170712
21–171009
21–170801
21–171010
21–170802
21–170803
21–170804
21–171011
21–170805
21–0801
1,3,5VJO
21–0703
2,4,6VJ
21–0808
7VJQ1
21–0802
02KR
21–0802
02KR
31–
2–
2–0304
N1,4,6–J
21–0905
1,3,5VJo2
21–0801
1,3,5VJO
21–0801
1,3,5VJO
2–0302
N2,3,5–J
21–0701
1,3,5VJ
21–0802
02KR
2–0302
N2,3,5–J
21–1207
1LK–JQ
21–0808
7VJQ1
21–0702
7VJ
21–0807
2,4,6VJQ1
2–0304
N1,4,6–J
21–0703
2,4,6VJ
+
–

POZNÁMKA:

🟥 - nové prvky a spoje

🟩 - rušené prvky a spoje

PS,SO: PS 408-21-04 Žst. Liptovský Hrádok, zabezpečenie st. postupov	7.9
Príloha: Úprava principiálnej schémy St.1 - SP5	